GEONEX HZR220

HORIZONTAL DTH-DRILLING RIG UP TO Ø219

HZR220 is extremely compact unit. It works in small sized infrastructural steel cased and rock drilling needs, with pneumatic percussion down the hole hammer. HZR220 has a wide drilling diameter range capability from Ø139 to Ø219. Wide equipment range enables effective and accurate DTH-drilling. HZR220 Rig & PP37 Power Pack with Geonex drilling equipment, is a ready solution for various infrastructural horizontal drilling needs.

APPLICATIONS FOR GEONEX HZR220

Horizontal drilling with steel pipe

Most effective on telecommunication or electric cable casing drilling, also for house connections for water & sewer pipe

Solid rock hole drilling

Accurate straight and steered rock holes, using tracking technology.

Anchoring and special applications

Also for house connections for water & sewer pipe casing drilling and other small infrastructural steel casing jobs

ACCESSORIES FOR GEONEX HZR220

GEONEX PP37 DIESEL DRIVEN HYDRAULIC POWER UNIT

PP37 is a compact and robust power pack. Harsh jobsite conditions set demands that have been taken care of in the engineering.

GEONEX HORIZONTAL DTH-DRILLING EQUIPMENT

Geonex provides specially for horizontal DTH-drilling developed drilling equipment: Overburden drilling systems, Horizontal drilling, DTH hammers, Augers and Tools.

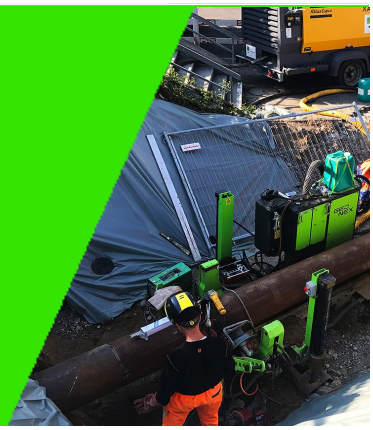

GEONEX OY
Tel. +358 400 693 143
info@geonex.fi
Teollisuustie 9, FI-95600 Ylitornio, Finland

FOR MORE INFORMATION VISIT

www.geonex.fi

GEONEX HZR220

HORIZONTAL DTH-DRILLING RIG UP TO Ø219

TECHNICAL INFORMATION

Geonex HZR220	
Casing diameter mm (in)	< Ø 219,1(8 5/8)
Rock Button diameter mm (in)	< Ø 203,0 (8,0)
DTH Hammer size	4", 5", 6"
Weight kg (lb)	1500 (3300)
Length mm (ft in)	4050 (13',4")
Width mm (ft in)	1420(4' 8")
Height (Jack legs in) mm (ft in)	1450 (4' 9")
Feed lenght mm (ft)	3400 (11' 2")
Max feed force KN (lbf)	50 (11240)
Max feed speed m/min (ft/min)	20 (65)
Max rotation torque, slow Nm (ftlb)	6500(4795)
Max rotation torque, fast Nm (ftlb)	3250 (2397)
Max rotation speed, slow	23 r/min
Max rotation speed, fast	46 r/min
Radio controlled	
OPTION	Water pump

PP37 Powerpack	
Diesel engine	Deutz 2011
Engine displacement liners (cid)	2,3 (140)
Engine power / Emission class	EU3 A
Max. engine speed	2500 Tier 3
Pump 1 max. flow l/min (gpm)	80 (21)
Pump 2 max. flow l/min (gpm)	80 (21)
Hydraulic pump 1 & 2 max press. bar (psi)	250 (3625)
Electric system	24 V
Hydraulic oil capasity l (gal)	110 (29)
Fuel capasity l (gal)	100 (26)
Length mm (ft in)	1620 (5' 4")
Width mm (ft in)	820 (2' 8")
Height mm (ft in)	1800 (5' 11")
OPTION Generator HG12kVA	
Weight kg (lb)	1400 (3085)

GEONEX OY
Tel. +358 400 693 143
info@geonex.fi
Teollisuustie 9, FI-95600 Ylitornio, Finland

FOR MORE INFORMATION VISIT
www.geonex.fi

GEONEX HZR220

HORIZONTAL DTH-DRILLING RIG UP TO Ø219

DTH hammers for HZR220			
Model	**4” DTH hammer**	**5” DTH hammer**	**6” DTH hammer**
Casing out diameter mm (in)	139,7 (5,5”)	168,3 (6,63”)	219,1 (8,63”)
Rock Button diameter mm (in)	115,0-133,0 (4,5”-5,25“)	133,0-152,0 (5,25”-6,0”)	152,0-203,0 (6,00”-8,00”)
Shank type	DHD 340	DHD 350	DHD 360
Top Adaptor type	API 2 3/8” Reg. Pin	API 3 ½” Reg. Pin	API 3 ½” Reg. Pin
Air flow at 13,8 bar (m3/min)	7,2	8,4	12,8
Air flow at 17,2 bar (m3/min)	10,5	12,9	17,1
Air flow at 20,6 bar (m3/min)	12,2	15,9	23,4

GEONEX OY
Tel. +358 400 693 143
info@geonex.fi
Teollisuustie 9, FI-95600 Ylitornio, Finland

FOR MORE INFORMATION VISIT
www.geonex.fi

GEONEX HZR220

HORIZONTAL DTH-DRILLING RIG UP TO Ø219

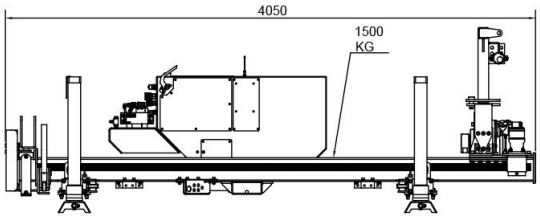

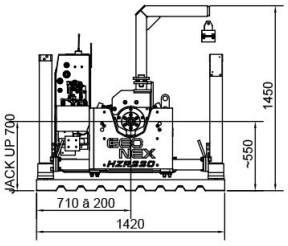

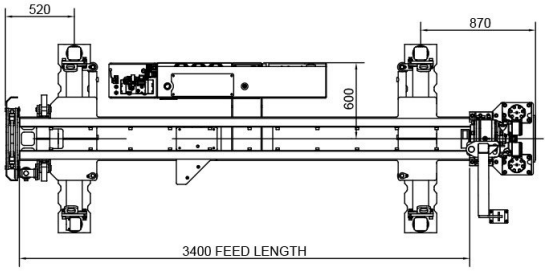

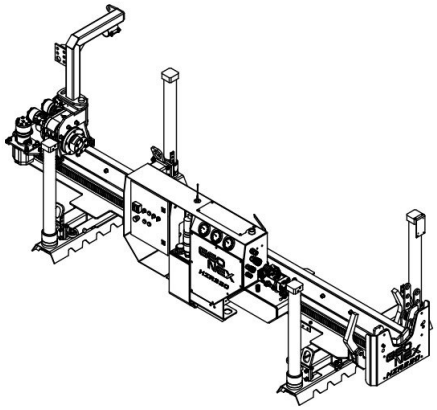

GEONEX OY
Tel. +358 400 693 143
info@geonex.fi
Teollisuustie 9, FI-95600 Ylitornio, Finland

FOR MORE INFORMATION VISIT

www.geonex.fi